The P point's move envelope

The P point is cross of J5 and J6 axis.

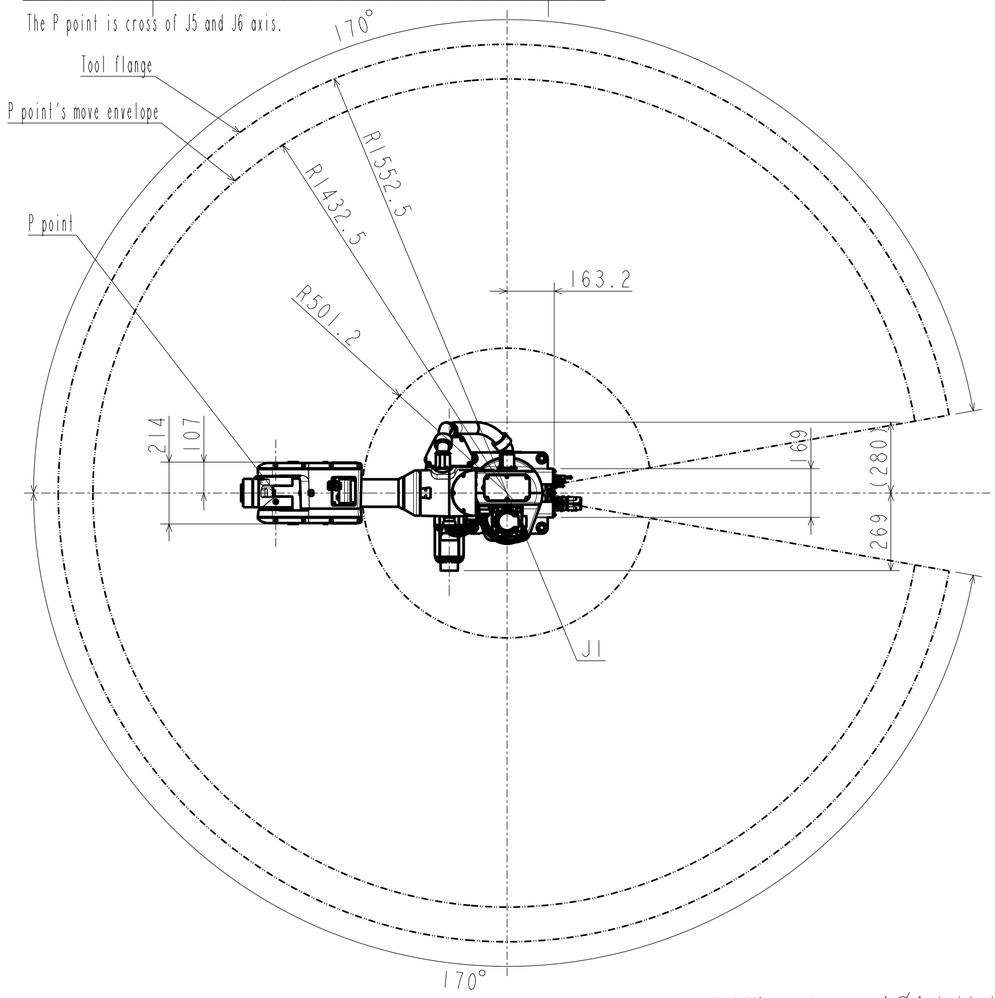

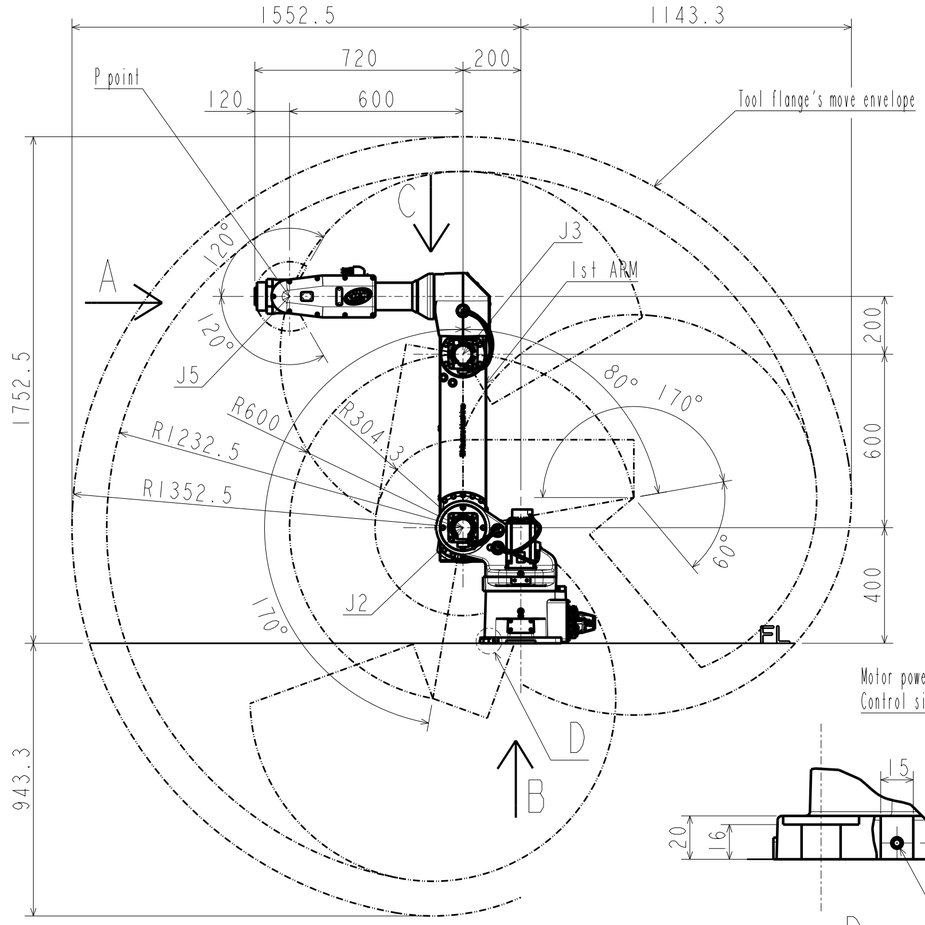

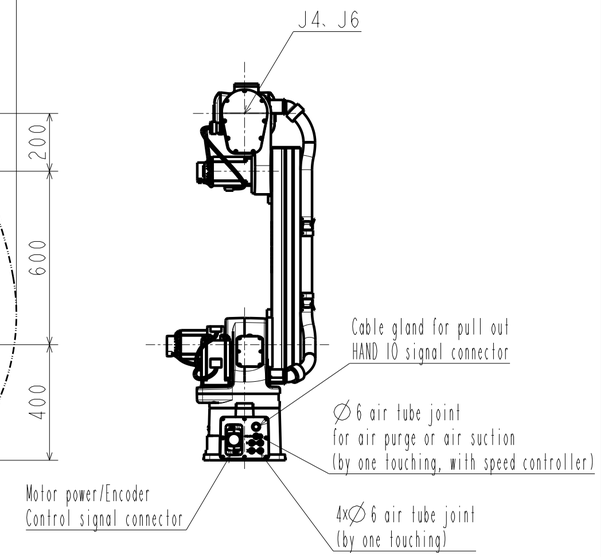

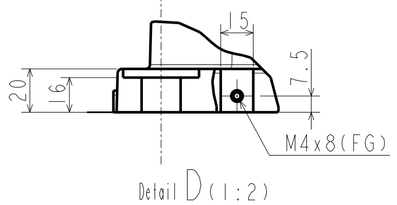

View C (Scale 1:4)

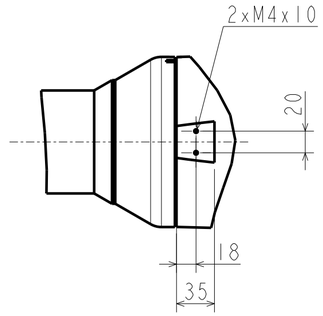

T-groove dimension (Scale 1:4)

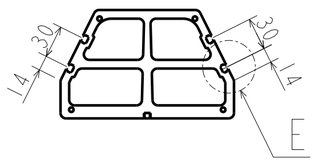

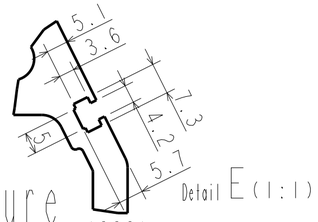

Detail of tool flange

View A (Scale 1:4)

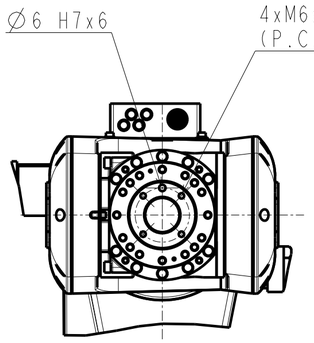

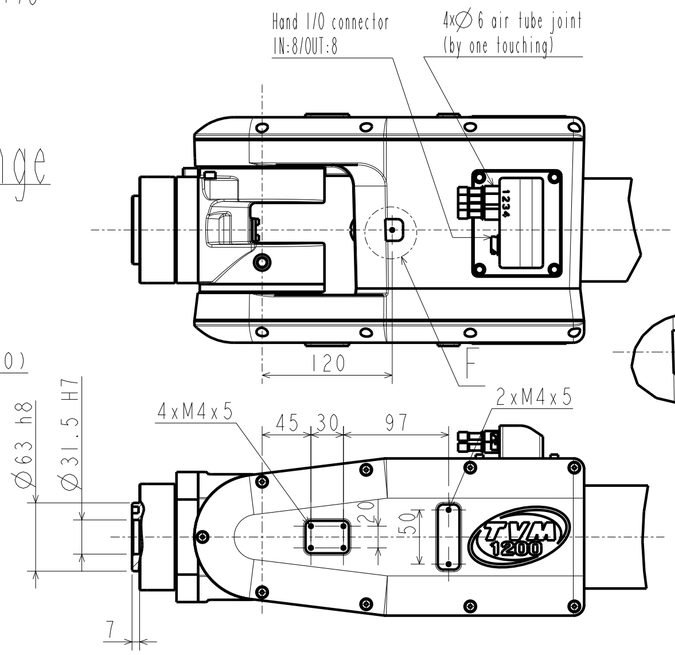

Detail of base fixture

View B (Scale 1:4)

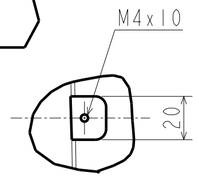

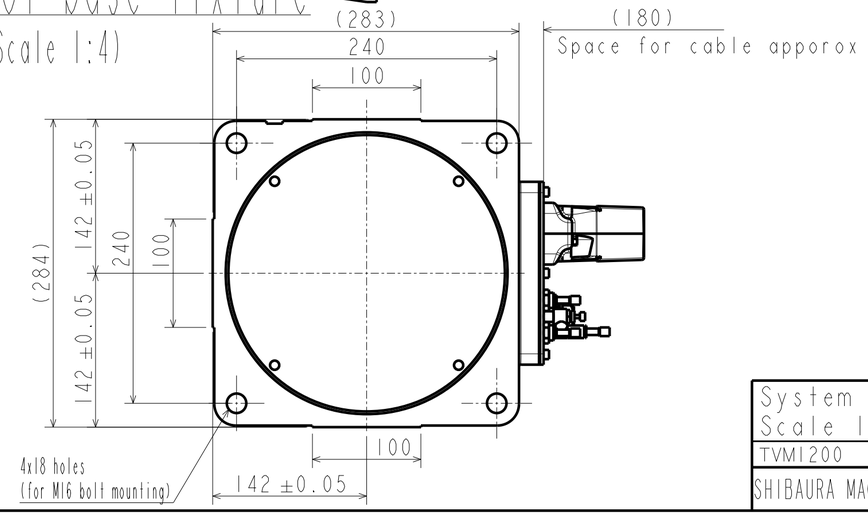

Joint	Moving envelope(deg)
J1	±170
J2	+170~-80
J3	+170~-60
J4	±190
J5	±120
J6	±360

The orientation in this drawing is 90° for J3 only and 0° for other axes.

System Robot Outline Scale 1:15	
TVM1200	
SHIBAURA MACHINE Co.,Ltd.	S-2NN20-3