The P point's moving envelope

The P point is cross of J5 and J6 axis

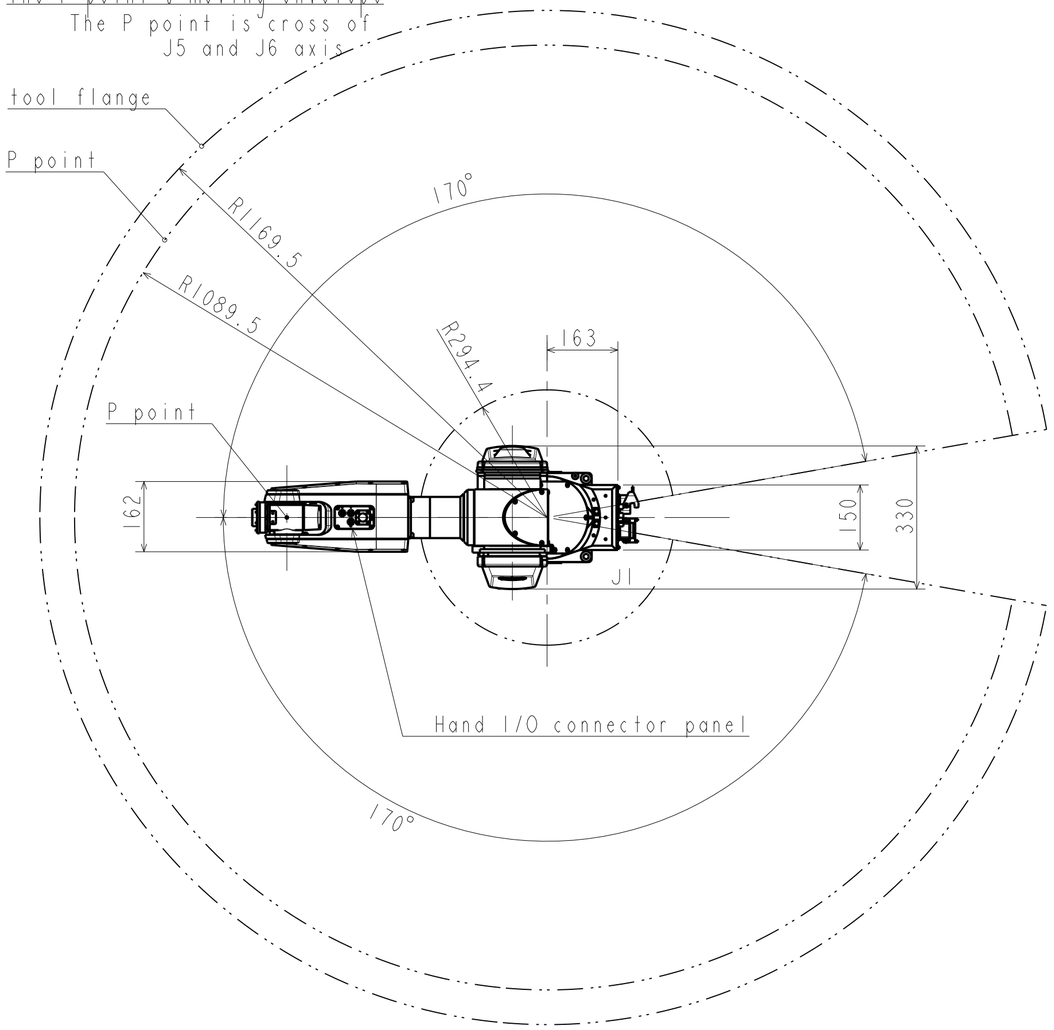

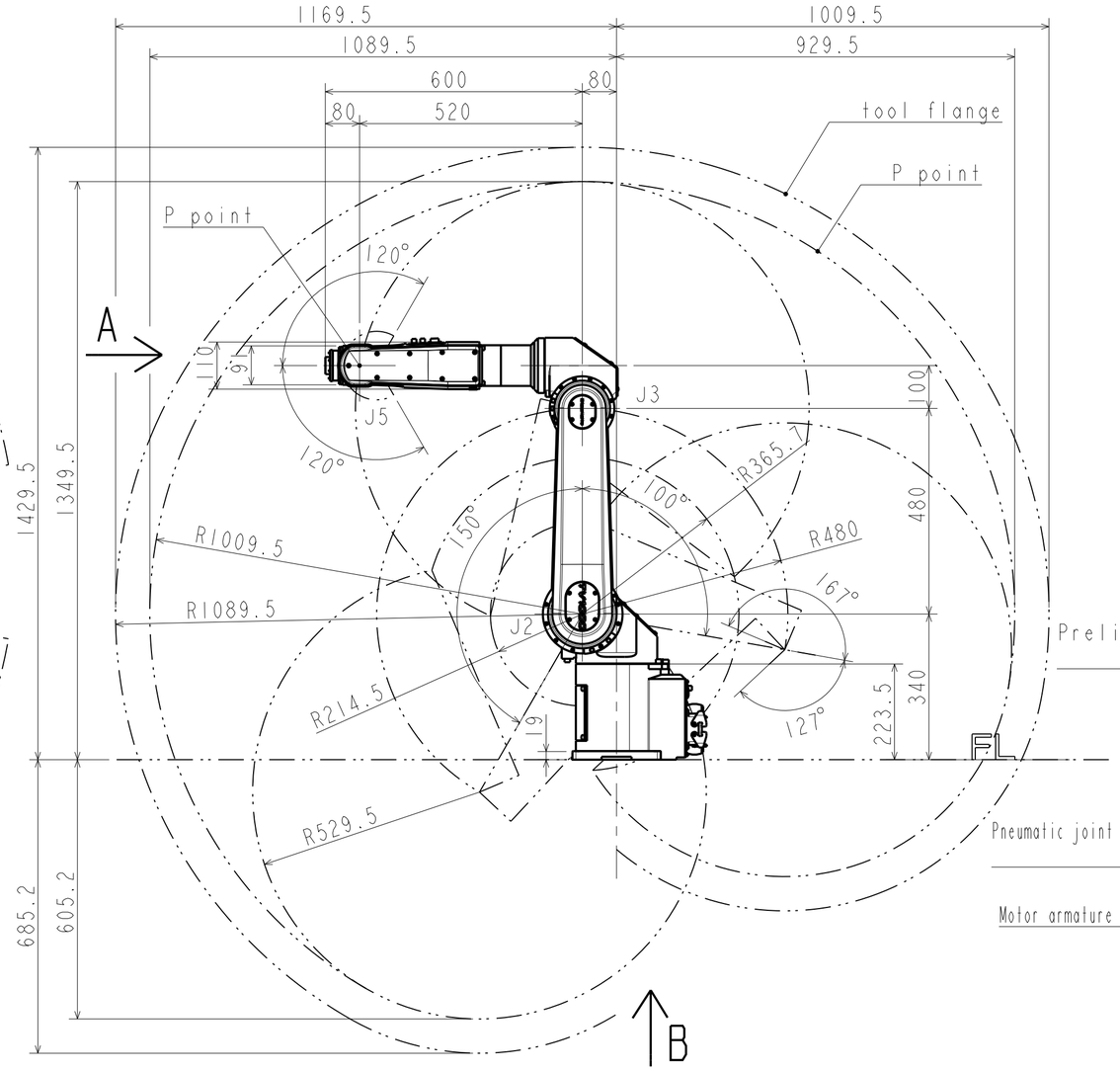

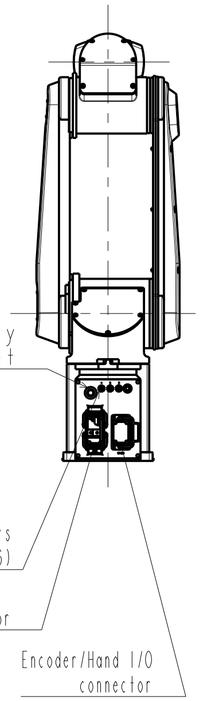

Detail of tool flange

A view scale 1:2

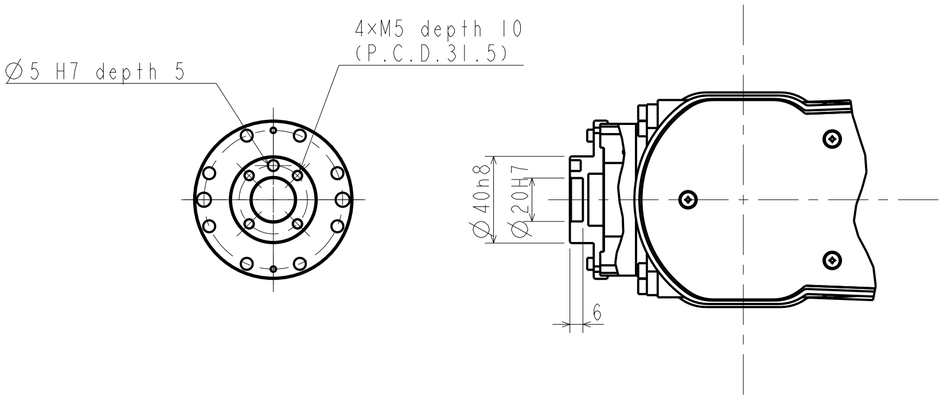

Detail of base fixture

B view scale 1:3

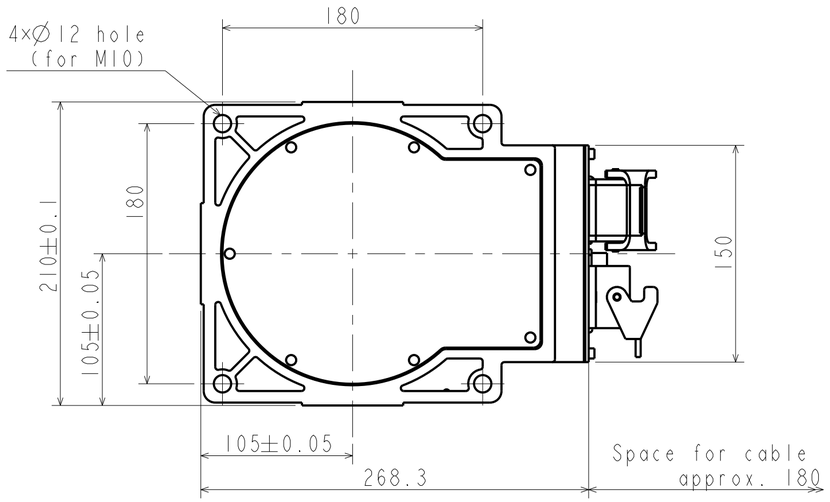

Joint	Moving envelope(deg)
J1	±170
J2	-100 ~ +150
J3	-127 ~ +167
J4	±190
J5	±120
J6	±360

This flange is shown the third axis is 90° and other axis are 0°.

System Robot Outline scale 1:10	
TV1000	
SHIBAURA MACHINE Co.,Ltd.	S-24L82-3